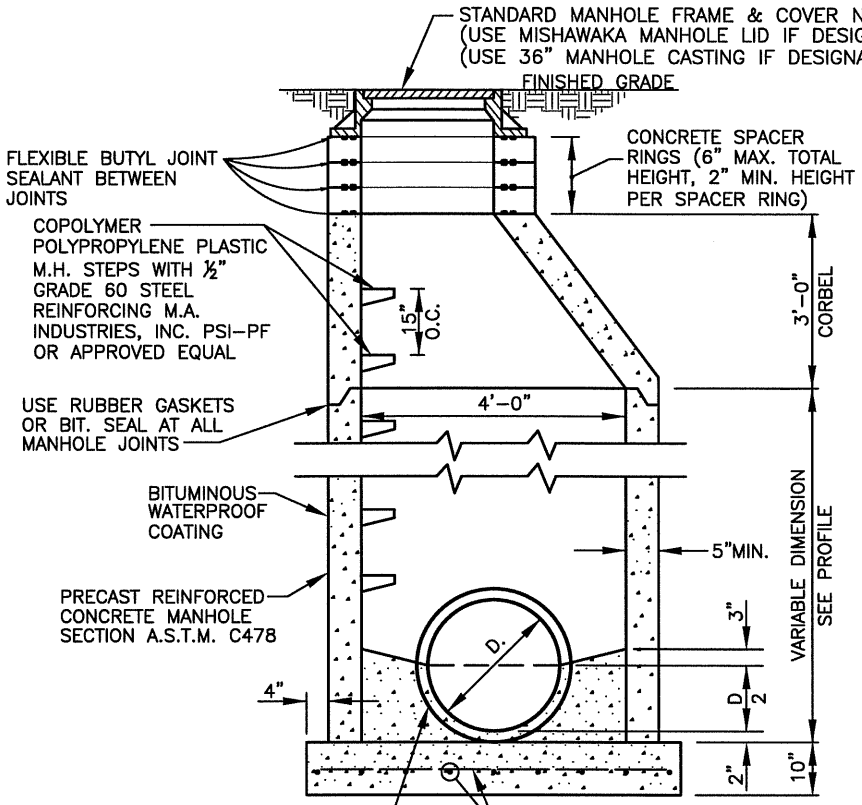

SECTIONAL A-A

N.T.S.

NOTE: ONLY CLAY & D.I. PIPES TO BE GROUTED IN PLACE WITH NON-SHRINKING 'EMBECO' GROUT OR EQUAL. A COMPRESSION GASKET, 'A-LOK' OR EQUAL, TO BE REQUIRED FOR P.V.C.

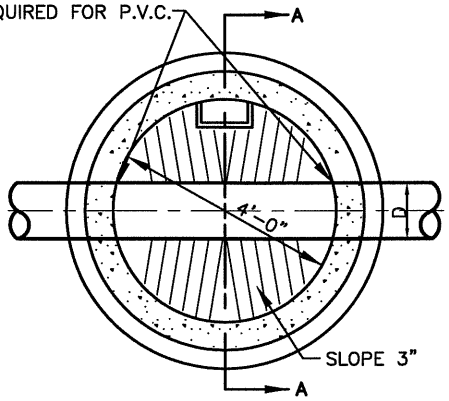

SECTIONAL PLAN

N.T.S.

NOTE: WHERE DIRECTED BY CITY ENGINEER COVER SHALL BE OF NON-ROCKING TYPE

DETAIL OF STANDARD MANHOLE TYPE "A"
D=8" THRU 33" SEWERS

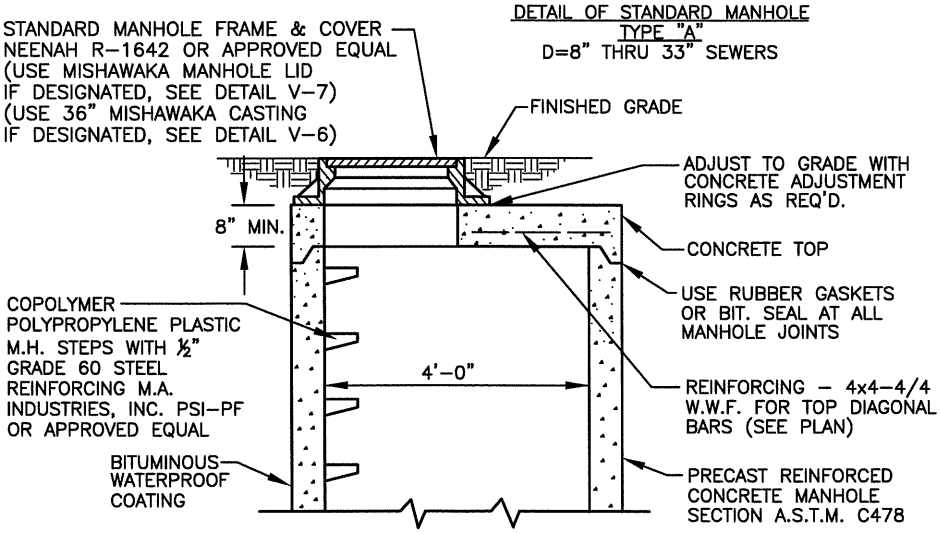

SECTION B-B

DETAIL OF MANHOLE TOP WHERE RESTRICTED HEADROOM WILL NOT PERMIT TAPERED WALLS

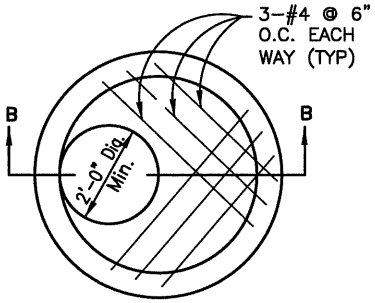

PLAN

PREPARED BY: DLZ INDIANA, LLC

ANDREW C. LEMBERIS REGISTERED No. PE10100882 STATE OF INDIANA PROFESSIONAL ENGINEER

4/24/07

APPROVED/REVISED BY THE BOARD OF PUBLIC WORKS & SAFETY
EFFECTIVE DATE: APRIL 2007

ITEM	REVISION	APPROVED DATE

CITY OF MISHAWAKA, INDIANA

ENGINEERING STANDARDS

TYPE "A" MANHOLE

SHT. NO. V-1

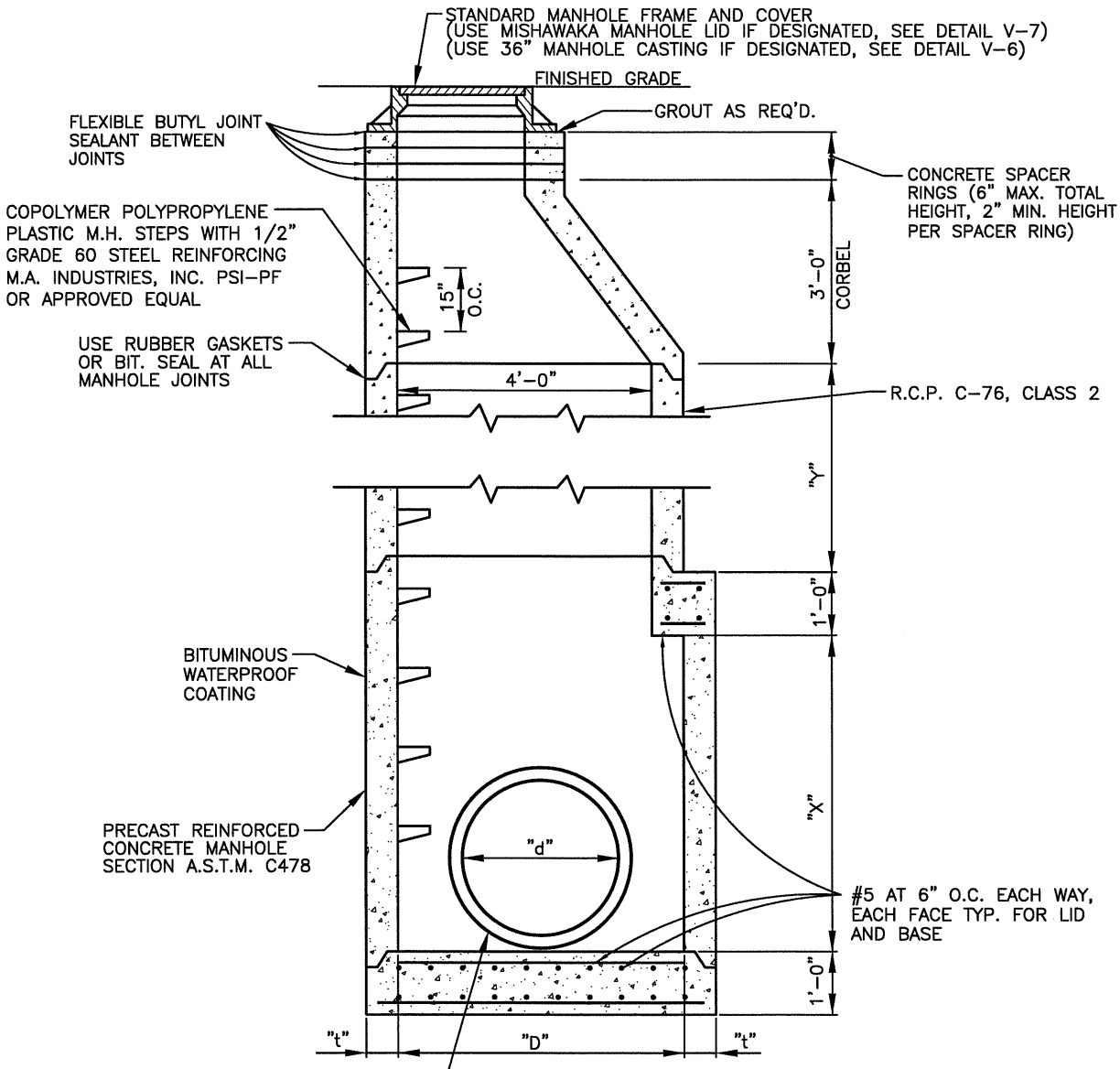

"d"	"D"	"t"	"X"	"Y"
36"	60"	6"	60"	AS REQUIRED
42"	72"	7"	72"	"
48"	72"	7"	72"	"
54"	84"	8"	84"	"
60"	84"	8"	84"	"
66"	96"	9"	96"	"
72"	96"	9"	96"	"
78"	108"	10"	108"	"
84"	108"	10"	108"	AS REQUIRED

PREPARED BY: DLZ INDIANA, LLC

ANDREW C. LEMBERIS REGISTERED No. PE10100882 STATE OF INDIANA PROFESSIONAL ENGINEER

4/24/07

APPROVED/REVISED BY THE BOARD OF PUBLIC WORKS & SAFETY
EFFECTIVE DATE: APRIL 2007

ITEM	REVISION	APPROVED DATE

CITY OF MISHAWAKA, INDIANA

ENGINEERING STANDARDS

TYPE "B" MANHOLE

SHT. NO. V-2

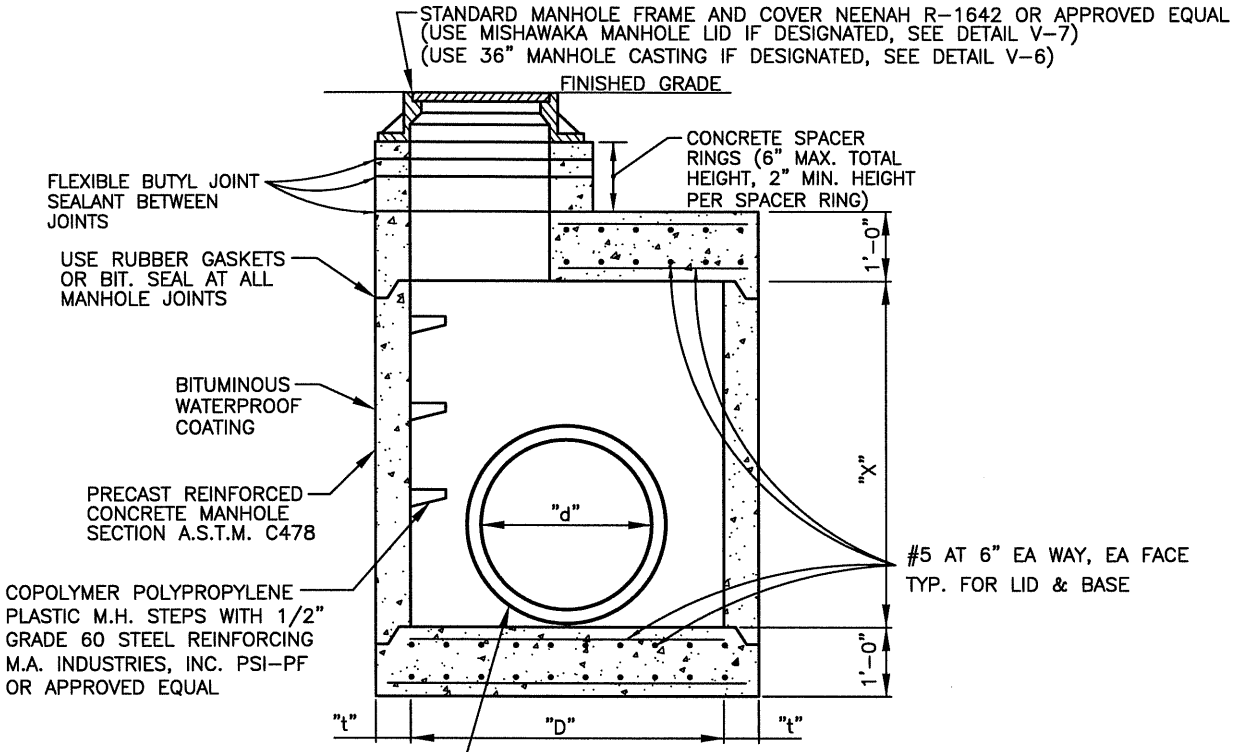

"d"	"D"	"t"	"X"
36"	60"	6"	AS REQUIRED
42"	72"	7"	AS REQUIRED
48"	72"	7"	AS REQUIRED
54"	84"	8"	AS REQUIRED
60"	84"	8"	AS REQUIRED
66"	96"	9"	AS REQUIRED
72"	96"	9"	AS REQUIRED
78"	108"	10"	AS REQUIRED
84"	108"	10"	AS REQUIRED

STANDARD MANHOLE TYP "B"
36" SEWER & LARGER
(RESTRICTED HEADROOM)

PREPARED BY: DLZ INDIANA, LLC

ANDREW C. LEMBERIS
REGISTERED
No. PE10100882
STATE OF INDIANA
PROFESSIONAL ENGINEER

4/24/07

APPROVED/REVISED BY THE BOARD OF PUBLIC WORKS & SAFETY
EFFECTIVE DATE: APRIL 2007

ITEM	REVISION	APPROVED DATE

CITY OF MISHAWAKA, INDIANA

ENGINEERING STANDARDS

TYPE "B" MANHOLE (RESTRICTED HEADROOM)

SHT. NO. V-3

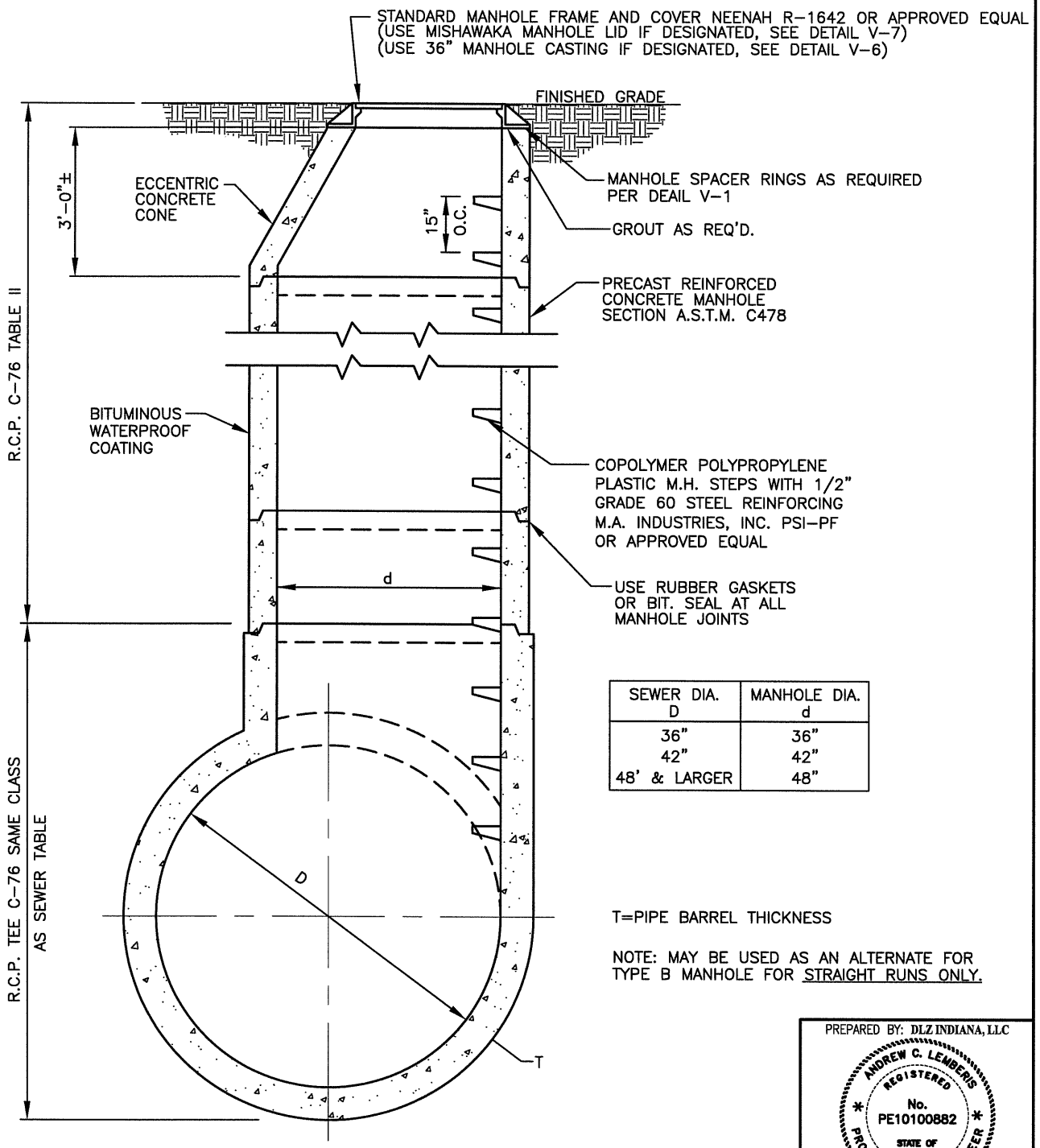

SEWER DIA. D	MANHOLE DIA. d
36"	36"
42"	42"
48' & LARGER	48"

T=PIPE BARREL THICKNESS

NOTE: MAY BE USED AS AN ALTERNATE FOR TYPE B MANHOLE FOR STRAIGHT RUNS ONLY.

STANDARD MANHOLE TYPE "C"
36" SEWERS & LARGER (STRAIGHT RUNS)

PREPARED BY: DLZ INDIANA, LLC

ANDREW C. LEMBERIS REGISTERED No. PE10100882 STATE OF INDIANA PROFESSIONAL ENGINEER

4/24/07

APPROVED/REVISED BY THE BOARD OF PUBLIC WORKS & SAFETY
EFFECTIVE DATE: APRIL 2007

ITEM	REVISION	APPROVED DATE

CITY OF MISHAWAKA, INDIANA

ENGINEERING STANDARDS

TYPE "C" MANHOLE

SHT. NO. V-4

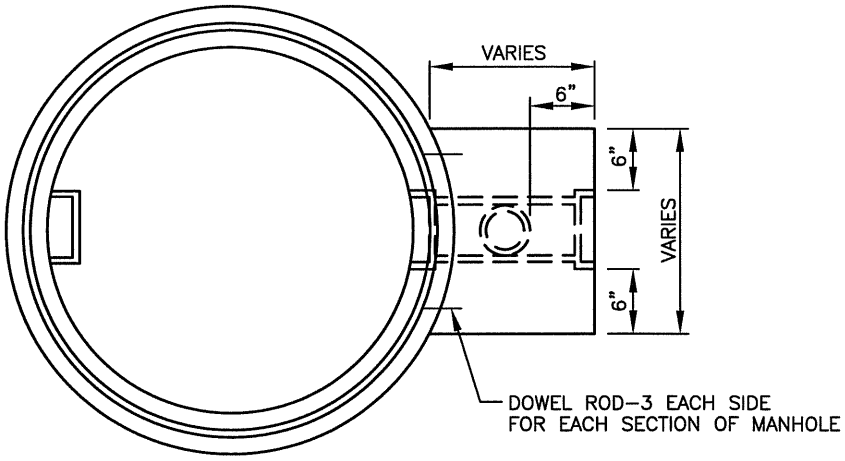

PLAN VIEW

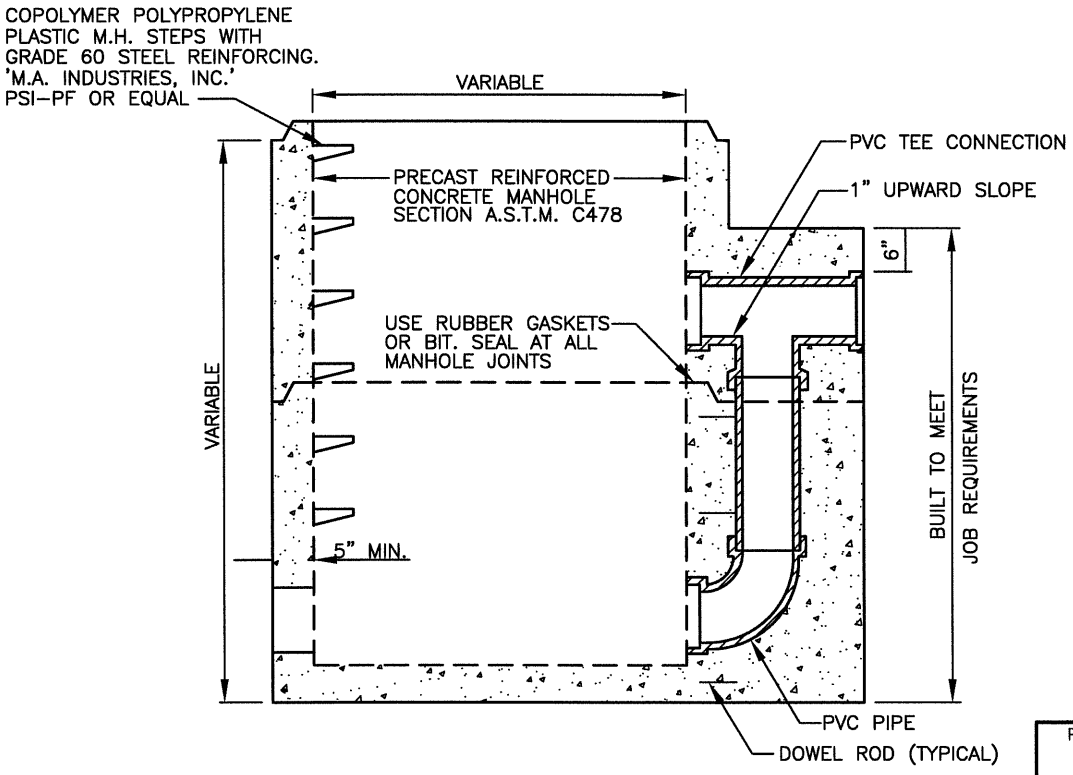

CROSS SECTION

NOTES:

1. MANHOLE CONFORMS TO ASTM C–478
2. MULTIPLE SECTION DROP–PVC PIPE SEALS WITH BELL AND SPIGOT CONNECTION.

PRECAST 48" DIA DROP MANHOLE

PREPARED BY: DLZ INDIANA, LLC

ANDREW C. LEMBERIS
REGISTERED
No.
PE10100882
STATE OF INDIANA
PROFESSIONAL ENGINEER

4/24/07

APPROVED/REVISED BY THE BOARD OF PUBLIC WORKS & SAFETY
EFFECTIVE DATE: APRIL 2007

ITEM	REVISION	APPROVED DATE

CITY OF MISHAWAKA, INDIANA

ENGINEERING STANDARDS

PRECAST DROP MANHOLE

SHT. NO.
V-5

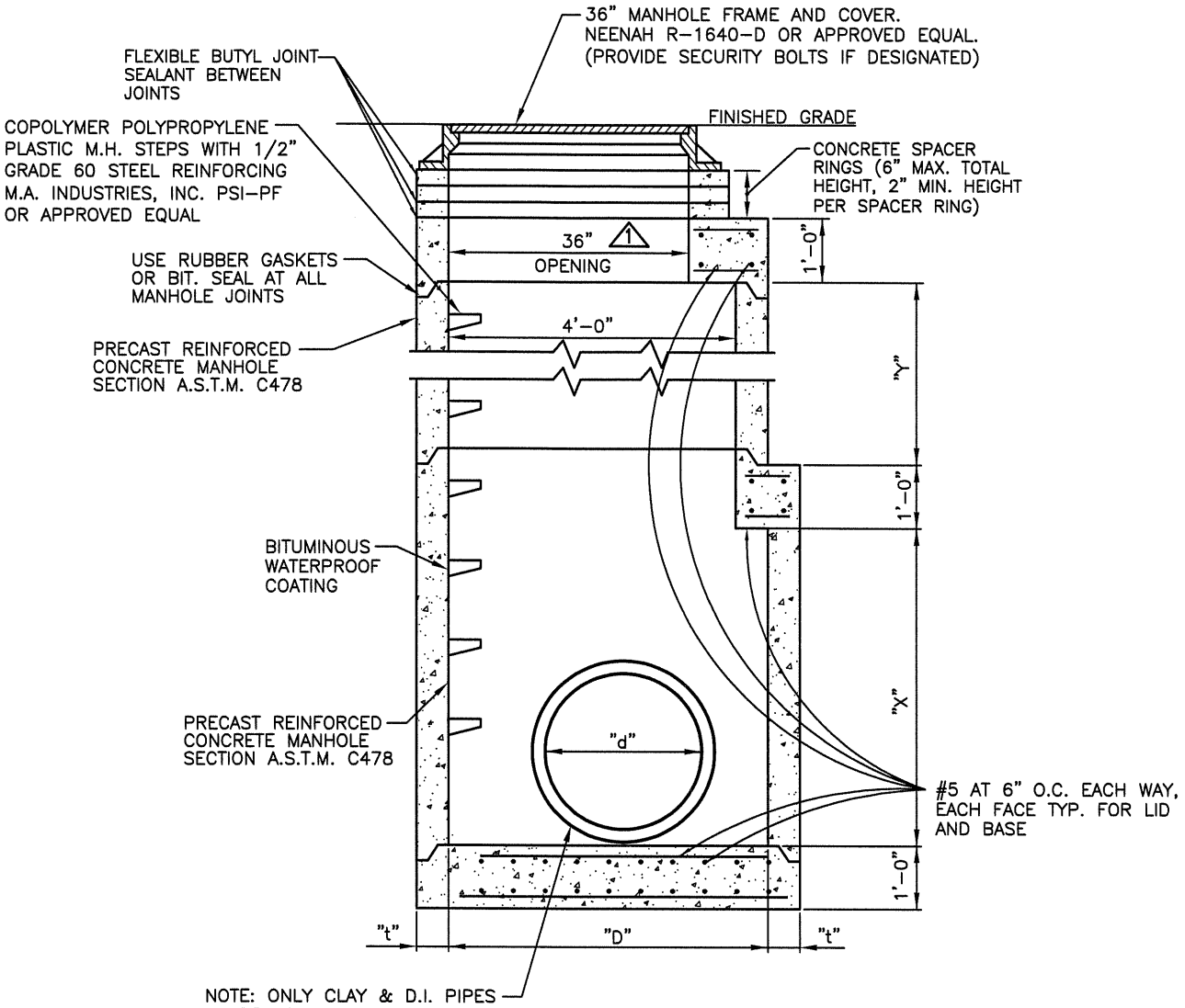

"d"	"D"	"t"	"X"	"Y"
8"	48"	8"	36"	AS REQUIRED
12"	48"	8"	36"	"
15"	48"	8"	36"	"
18"	48"	8"	36"	"
24"	48"	8"	60"	"
30"	60"	8"	60"	"
36"	60"	8"	60"	"
42"	72"	8"	72"	"
48"	72"	8"	72"	"
54"	84"	8"	84"	"
60"	84"	8"	84"	"
66"	96"	9"	96"	"
72"	96"	9"	96"	"
78"	108"	10"	108"	"
84"	108"	10"	108"	AS REQUIRED

PREPARED BY: DLZ INDIANA, LLC

ANDREW C. LEMBERIS REGISTERED No. PE10100882 STATE OF INDIANA PROFESSIONAL ENGINEER

11/1/07

APPROVED/REVISED BY THE BOARD OF PUBLIC WORKS & SAFETY
EFFECTIVE DATE: APRIL 2007

ITEM	REVISION	APPROVED DATE
1	MANHOLE OPENING REVISED	11-1-07
2	ADDITIONAL PIPE SIZES ADDED TO TABLE	11-1-07

CITY OF MISHAWAKA, INDIANA

ENGINEERING STANDARDS

36" MANHOLE CASTING

SHT. NO. V-6

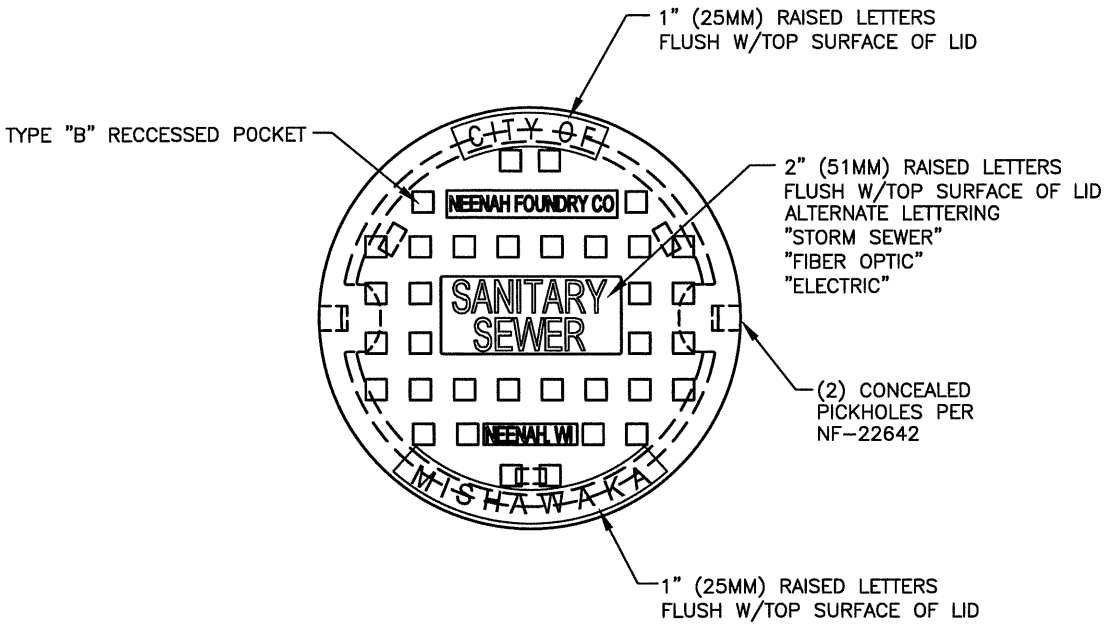

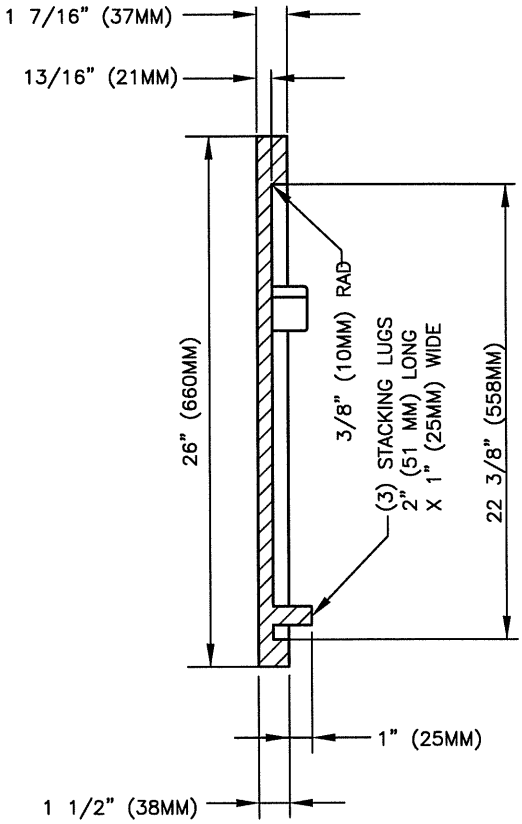

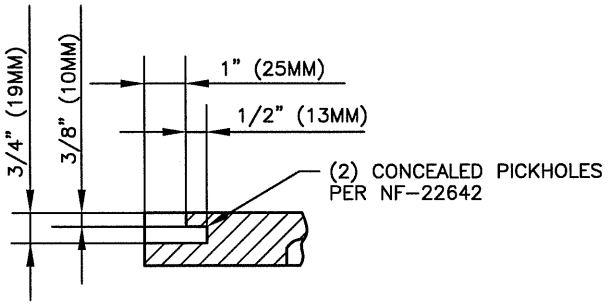

PICKHOLE DETAIL

NOTE: ALL DIMENSIONS SHOWN ARE IN ENGLISH AND (METRIC)
MATERIAL: CAST GRAY IRON ASTM A-48, CLASS 358
WEIGHT: 126lb.
MANHOLE FRAME: NEENAH R-1642

PREPARED BY: DLZ INDIANA, LLC

ANDREW C. LEMBERIS
REGISTERED
No. PE10100882
STATE OF INDIANA
PROFESSIONAL ENGINEER

ACL
4/24/07

APPROVED/REVISED BY THE BOARD OF PUBLIC WORKS & SAFETY
EFFECTIVE DATE: APRIL 2007

ITEM	REVISION	APPROVED DATE

CITY OF MISHAWAKA, INDIANA

ENGINEERING STANDARDS

MISHAWAKA MANHOLE LID DETAIL

SHT. NO. V-7

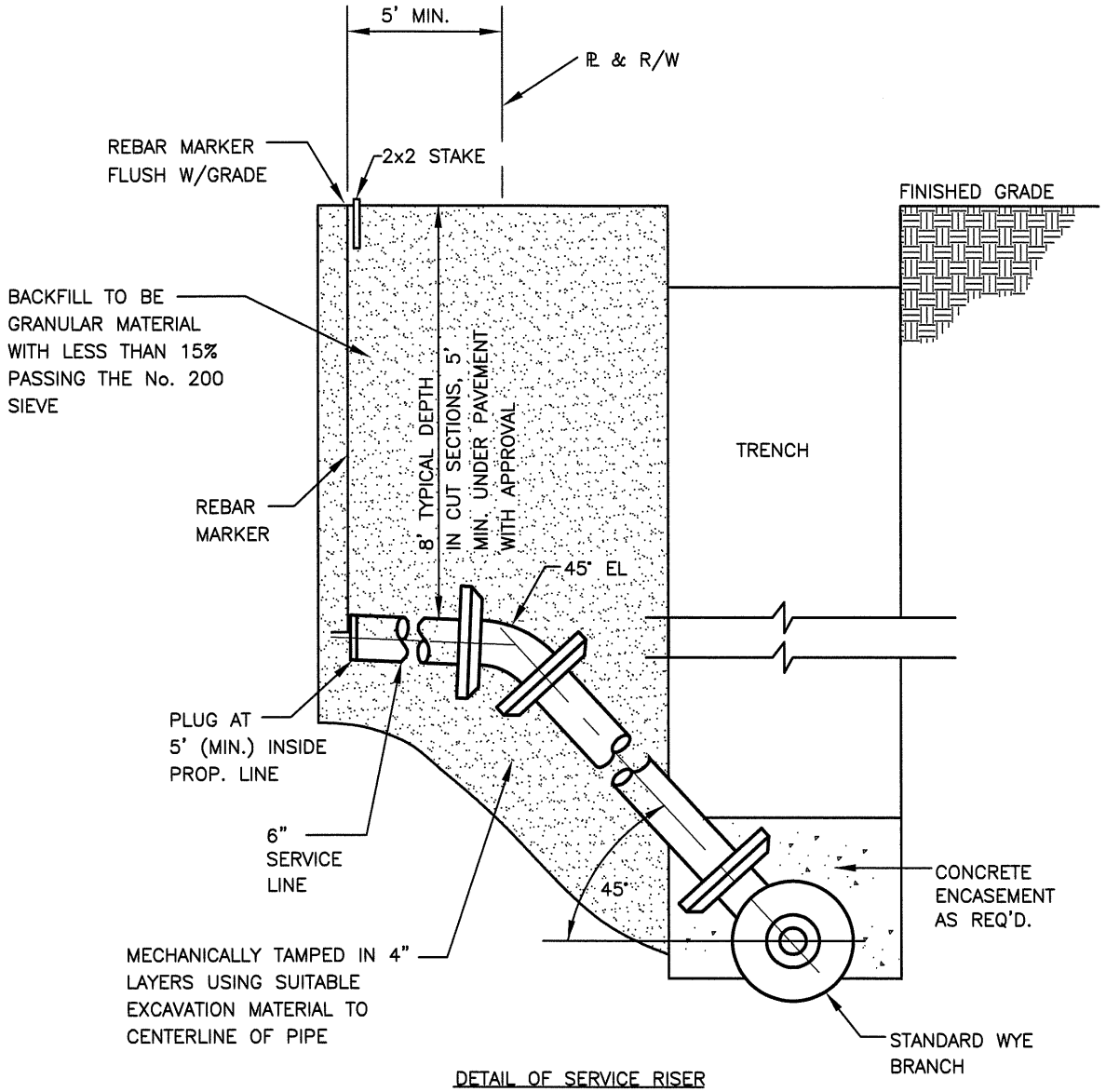

DETAIL OF SERVICE RISER

BACK-FILL – IN STREETS, ALLEYS, SIDEWALKS OR DRIVING AREAS:
6" LAYERS, SOLIDLY TAMPED TO SUB-GRADE OF STREET BASE.

BACKFILL SHALL BE COMPACTED TO 95% STANDARD PROCTOR

BACK-FILL – IN EASEMENT OR OPEN AREAS:
12" LAYERS SOLIDLY TAMPED.

NOTES:
1. IN CUT SECTIONS OR ADJACENT PROPOSED IS FILLED WHERE THE BUILDING AT SET BACK WILL HAVE AN EXISTING GRADE ELEVATION DIFFERENCE OF 5' OR GREATER THAN STREET PROFILE GRADE, DEPTH OF SANITARY SEWER LATERAL SHALL BE RAISED TO WITHIN 8' OF EXISTING GRADE ELEVATION.
2. ALL SANITARY SEWERS SHALL BE DESIGNED AND INSTALLED IN ACCORDANCE WITH THE RECOMMENDED STANDARDS FOR WASTEWATER FACILITIES BY THE GREAT LAKES–UPPER MISSISSIPPI RIVER BOARD OF STATE AND PROVINCIAL PUBLIC HEALTH AND ENVIRONMENTAL MANAGERS. SANITARY SEWERS SHALL BE APPROVED BY THE INDIANA DEPARTMENT OF ENVIRONMENTAL MANAGEMENT AND THE CITY OF MISHAWAKA. 1
3. THE CONTRACTOR OR DEVELOPER SHALL PROVIDE THE DEPARTMENT OF ENGINEERING WITH "AS BUILT" DRAWINGS OF ALL SANITARY SEWER AND SERVICES.
4. ALL NECESSARY PERMITS FOR SERVICE CONNECTIONS TO MAIN LINE SEWERS SHALL REQUIRE A PERMIT AND TAPPING FEES PER THE CITY'S REQUIREMENTS.

PREPARED BY: DLZ INDIANA, LLC

ANDREW C. LEMBERIS REGISTERED No. PE10100882 STATE OF INDIANA PROFESSIONAL ENGINEER

1/15/08

APPROVED/REVISED BY THE BOARD OF PUBLIC WORKS & SAFETY
EFFECTIVE DATE: APRIL 2007

ITEM	REVISION	APPROVED DATE
1	NOTE 2 REVISED	1-15-08

CITY OF MISHAWAKA, INDIANA

ENGINEERING STANDARDS

SEWER SERVICE RISER

SHT. NO. V-8

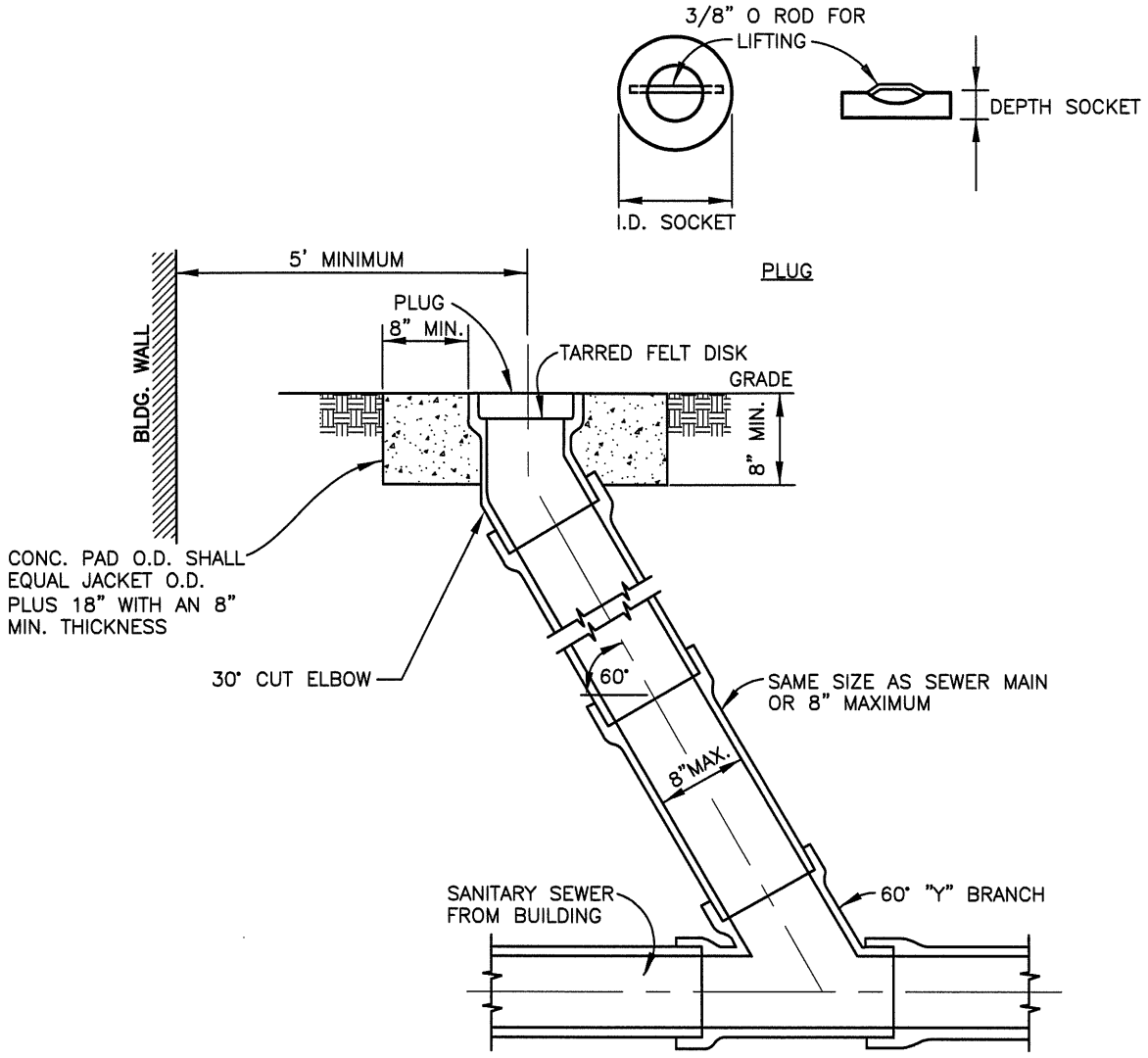

TYPICAL CLEAN-OUT
N.T.S.

NOTES:

1. LOCATE CLEAN-OUT SUCH THAT PLUG IS NOT LOCATED IN SIDEWALK UNLESS DIRECTED OTHERWISE.
2. IN PUBLIC RIGHT OF WAY, PLUG TO BE NEENAH #R-4055 OR EQUAL.
3. THIS DETAIL SHALL BE FOR CLEAN-OUTS ON SEWERS ACCEPTED BY THE CITY FOR MAINTENANCE AND USED ONLY WHEN APPROVED BY THE CITY.
4. ALL SANITARY SEWERS SHALL BE DESIGNED AND INSTALLED IN ACCORDANCE WITH THE RECOMMENDED STANDARDS FOR WASTEWATER FACILITIES BY THE GREAT LAKES-UPPER MISSISSIPPI RIVER BOARD OF STATE AND PROVINCIAL PUBLIC HEALTH AND ENVIRONMENTAL MANAGERS. SANITARY SEWERS SHALL BE APPROVED BY THE INDIANA DEPARTMENT OF ENVIRONMENTAL MANAGEMENT AND THE CITY OF MISHAWAKA. (1)
5. THE CONTRACTOR OR DEVELOPER SHALL PROVIDE THE DEPARTMENT OF ENGINEERING WITH "AS BUILT" DRAWINGS OF ALL SANITARY SEWER AND SERVICES.
6. ALL SERVICE CONNECTIONS TO MAIN LINE SEWERS SHALL REQUIRE A PERMIT AND TAPPING FEES PER THE CITY'S REQUIREMENTS.

PREPARED BY: DLZ INDIANA, LLC

ANDREW C. LEMBERIS REGISTERED No. PE10100882 STATE OF INDIANA PROFESSIONAL ENGINEER

1/15/08

APPROVED/REVISED BY THE BOARD OF PUBLIC WORKS & SAFETY
EFFECTIVE DATE: APRIL 2007

ITEM	REVISION	APPROVED DATE
1	NOTE 4 REVISED	1-15-08

CITY OF MISHAWAKA, INDIANA

ENGINEERING STANDARDS

TYPICAL CLEAN-OUT

SHT. NO. V-9

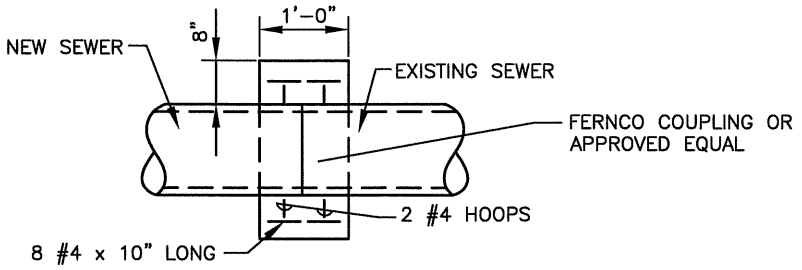

CONCRETE COLLAR FOR JOINING OLD & NEW PIPE

–NOT TO SCALE–

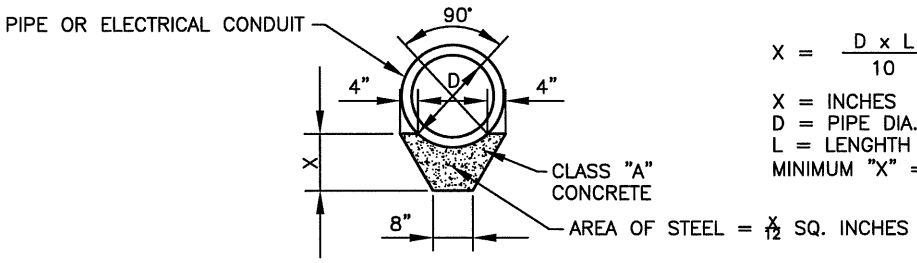

$$X = \frac{D \times L}{10}$$

X = INCHES
D = PIPE DIA. IN INCHES
L = LENGTH OF SUPPORT IN FEET
MINIMUM "X" = 7

BEARING FOR SUPPORT SHALL BE A MINIMUM OF 2 FEET ON UNDISTURBED GROUND AT EACH END

DETAIL OF PIPE SUPPORTS TO BE USED WHERE PIPE OR ELECTRICAL CONDUITS CROSS TRENCH

–NOT TO SCALE–

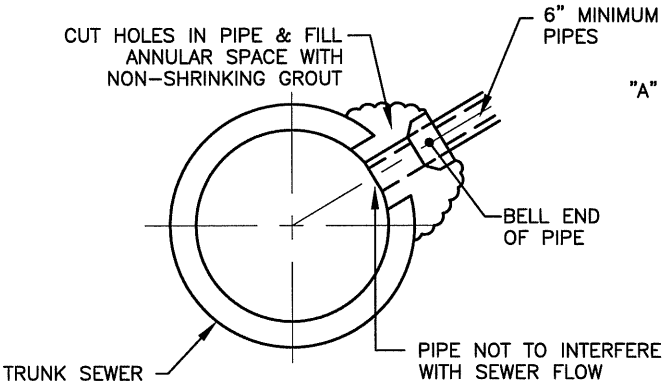

$$"A" = \frac{R}{0.7071}$$

FORMULA TO DETERMINE MAXIMUM SECTION OF PIPE THAT CAN BE CUT OUT OF TRUNK SEWER.

"A" = CUTTING DIMENSION (CHORD LENGTH)
R = RADIUS INSIDE TRUNK SEWER IN INCHES
0.7071 = CONSTANT

NOTE:
IF OUTSIDE DIAMETER OF TAP PIPE IS GREATER THAN DIMENSION "A" INSTALL APPLICABLE FITTING AS APPROVED AND DIRECTED BY THE DEPARTMENT OF ENGINEERING.

TYPICAL BLIND TAP

–NOT TO SCALE–

NOTE: BLIND TAP ALLOWED ONLY IN SEWER MAINS LARGER THAN 12" IN DIAMETER.

PREPARED BY: DLZ INDIANA, LLC

ANDREW C. LEMBERIS
REGISTERED
No. PE10100882
STATE OF INDIANA
PROFESSIONAL ENGINEER

4/24/07

APPROVED/REVISED BY THE BOARD OF PUBLIC WORKS & SAFETY
EFFECTIVE DATE: APRIL 2007

ITEM	REVISION	APPROVED DATE

CITY OF MISHAWAKA, INDIANA

ENGINEERING STANDARDS

MISCELLANEOUS PIPE DETAILS

SHT. NO. V-10

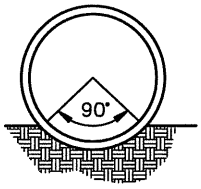

THE LOWER 90 ARC OF THE BARREL OF THE PIPE SHOULD BE IN FIRM CONTACT WITH UNDISTURBED EARTH.

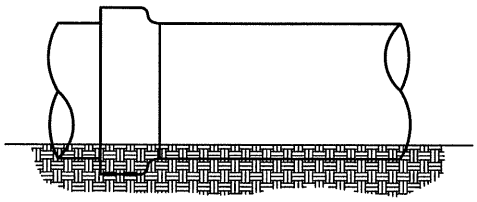

SMALL EXCAVATIONS SHOULD BE MADE FOR THE BELLS. THESE SHOULD BE NO LARGER THAN NECCESSARY TO CLEAR THE BELL.

NOTE: IF NATIVE MATERIAL IS GREATER THAN 15% PASSING THE NO. 200 SIEVE THEN BEDDING DETAIL 'B' WILL BE USED EXCLUSIVELY.

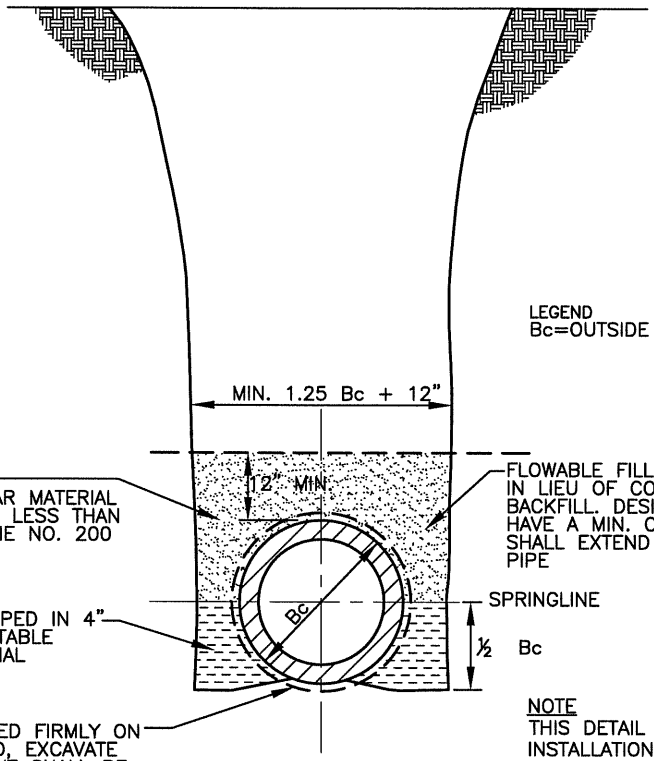

LEGEND
Bc=OUTSIDE DIAMETER

HAND BACKFILL NATIVE GRANULAR MATERIAL PROVIDING THAT LESS THAN 15% PASSES THE NO. 200 SIEVE

FLOWABLE FILL MAY BE UTILIZED IN LIEU OF COMPACTED BACKFILL. DESIGN MIX SHALL HAVE A MIN. OF 200 PSI & SHALL EXTEND TO 1'-0" ABOVE PIPE

MECHANICALLY TAMPED IN 4" LAYERS USING SUITABLE EXCAVATION MATERIAL

PIPE SHALL BE BEDDED FIRMLY ON UNDISTURBED GROUND, EXCAVATE FOR BELLS, NO WEIGHT SHALL BE SUPPORTED BY THE BELLS

NOTE
THIS DETAIL DOES NOT PERTAIN TO THE INSTALLATION OF SANITARY SEWER PIPE. REFER TO SHEET NUMBER V-12 FOR THE SANITARY SEWER PIPE INSTALLATION DETAIL.

BACK-FILL - IN STREETS, ALLEYS, SIDEWALKS OR DRIVING AREAS:
6" LAYERS, SOLIDLY TAMPED TO SUB-GRADE OF STREET BASE.

BACKFILL SHALL BE COMPACTED TO 95% STANDARD PROCTOR

BACK-FILL - IN EASEMENT OR OPEN AREAS:
12" LAYERS SOLIDLY TAMPED.

PREPARED BY: DLZ INDIANA, LLC

ANDREW C. LEMBERIS REGISTERED No. PE10100882 STATE OF INDIANA PROFESSIONAL ENGINEER

4/24/07

APPROVED/REVISED BY THE BOARD OF PUBLIC WORKS & SAFETY
EFFECTIVE DATE: APRIL 2007

ITEM	REVISION	APPROVED DATE

CITY OF MISHAWAKA, INDIANA

ENGINEERING STANDARDS

BEDDING DETAIL "A"

SHT. NO. V-11

BACK–FILL – IN STREETS, ALLEYS, SIDEWALKS OR DRIVING AREAS:
6" LAYERS, SOLIDLY TAMPED TO SUB–GRADE OF STREET BASE.

BACKFILL SHALL BE COMPACTED TO 95% STANDARD PROCTOR

BACK–FILL – IN EASEMENT OR OPEN AREAS:
12" LAYERS SOLIDLY TAMPED.

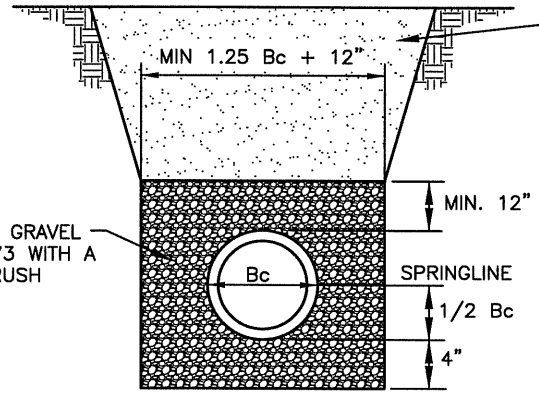

FOR BACKFILL UNDER STREETS, ALLEYS OR DRIVING AREAS BACKFILL WILL BE GRANULAR MATERIAL WITH LESS THAN 15% PASSING THE NO. 200 SIEVE.

FOR BACKFILL IN EASEMENTS OR OPEN AREAS NATIVE MATERIAL WILL BE ACCEPTABLE.

CRUSHED STONE OR GRAVEL INDOT NO. 8,9 OR 73 WITH A 50% MECHANICAL CRUSH COUNT.

ALL BEDDING AND INITIAL BACKFILL SHALL BE INSTALLED IN 4" TO 6" BALANCED LIFTS AND MECHANICALY TAMPED. BEDDING MATERIAL SHALL BE HAND PLACED AROUND THE HAUNCH AND SIDES OF THE PIPE TO ENSURE PROPER COMPACTION AND COMPLETE FILLING OF ALL VOIDS.

LEGEND
Bc=OUTSIDE DIAMETER OF PIPE

PREPARED BY: DLZ INDIANA, LLC

ANDREW C. LEMBERIS
REGISTERED
No. PE10100882
STATE OF INDIANA
PROFESSIONAL ENGINEER

4/24/07

APPROVED/REVISED BY THE BOARD OF PUBLIC WORKS & SAFETY
EFFECTIVE DATE: APRIL 2007

ITEM	REVISION	APPROVED DATE

CITY OF MISHAWAKA, INDIANA

ENGINEERING STANDARDS

BEDDING DETAIL "B"

SHT. NO. V-12

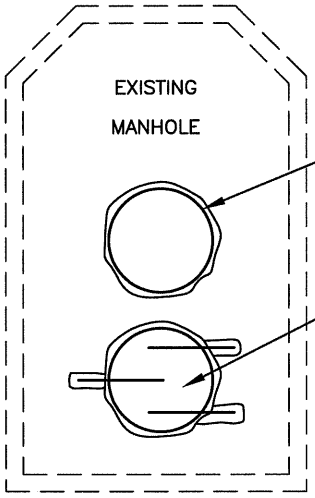

CORE DRILL OPENING IN EXISTING MANHOLE FOR PLACEMENT OF NEW PIPE. GROUT ANNULAR SPACE FULL WITH NON-SHRINK GROUT, MASTER BUILDERS, MASTERFLOW 928, OR EQUAL.

EXISTING PIPE REMOVED. EPOXY GROUT #3 DOWELS INTO EXISTING CONCRETE, WITH MASTER BUILDERS, BRUTEM AB OR EQUAL. REPAIR HOLE WITH MASTER BUILDERS, SET 45-HOT WEATHER FORMULA, IN STRICT CONFORMANCE WITH MANUFACTURERS RECOMMENDATIONS; OR EQUAL

PREPARED BY: DLZ INDIANA, LLC

ANDREW C. LEMBERIS
REGISTERED
No.
PE10100882
STATE OF INDIANA
PROFESSIONAL ENGINEER

4/24/07

APPROVED/REVISED BY THE BOARD OF PUBLIC WORKS & SAFETY
EFFECTIVE DATE: APRIL 2007

ITEM	REVISION	APPROVED DATE

CITY OF MISHAWAKA, INDIANA

ENGINEERING STANDARDS

MANHOLE WALL REPAIR DETAIL

SHT. NO.
V-13

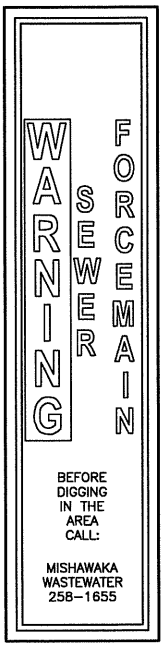

DECAL DETAIL
–NOT TO SCALE–

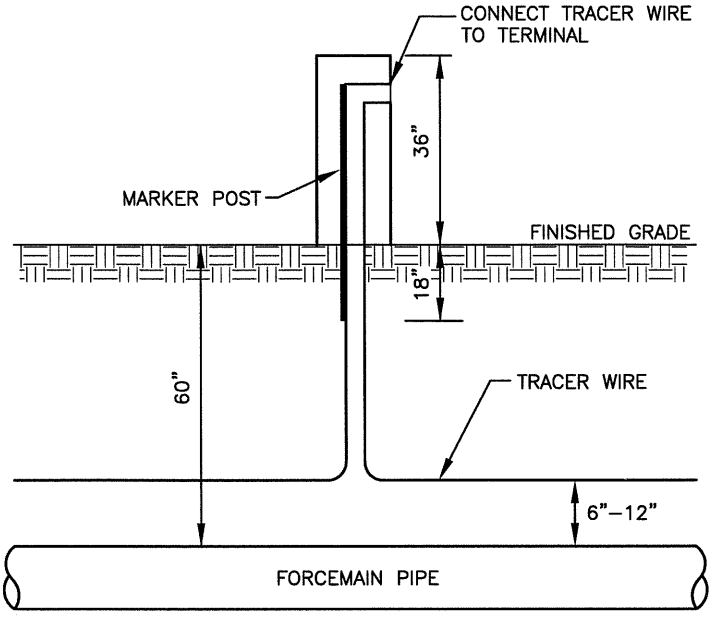

FORCEMAIN MARKER DETAIL
–NOT TO SCALE–

*NOTE:

1. ALL HDPE FORCEMAIN PIPE SHALL BE INSTALLED WITH AN ELECTRONICALLY CONTINUOUS TYPE TW INSULATED #12 TRACING WIRE.
2. MARKERS SHALL BE PLACED AT 400 FEET INTERVALS AND ALL CHANGES IN DIRECTION. MARKERS SHALL BE RHINO 2 TERMINAL TRIVIEW TEST STATIONS PRODUCT #TVT15YGB2 OR EQUAL WITH DECALS ON EACH SIDE. THE DECALS SHALL BE GREEN WITH WHITE LETTERING AND READ: "WARNING SEWER FORCEMAIN" AND SHALL HAVE THE PHONE NUMBER OF THE MISHAWAKA WASTEWATER DEPARTMENT: 258–1655. THE TRACER WIRE SHALL BE CONNECTED TO THE TERMINAL IN EACH MARKER.

PREPARED BY: DLZ INDIANA, LLC

ANDREW C. LEMBERIS
REGISTERED
No. PE10100882
STATE OF INDIANA
PROFESSIONAL ENGINEER

4/24/07

APPROVED/REVISED BY THE BOARD OF PUBLIC WORKS & SAFETY
EFFECTIVE DATE: APRIL 2007

ITEM	REVISION	APPROVED DATE

CITY OF MISHAWAKA, INDIANA

ENGINEERING STANDARDS

FORCEMAIN MARKER DETAIL

SHT. NO. V-14

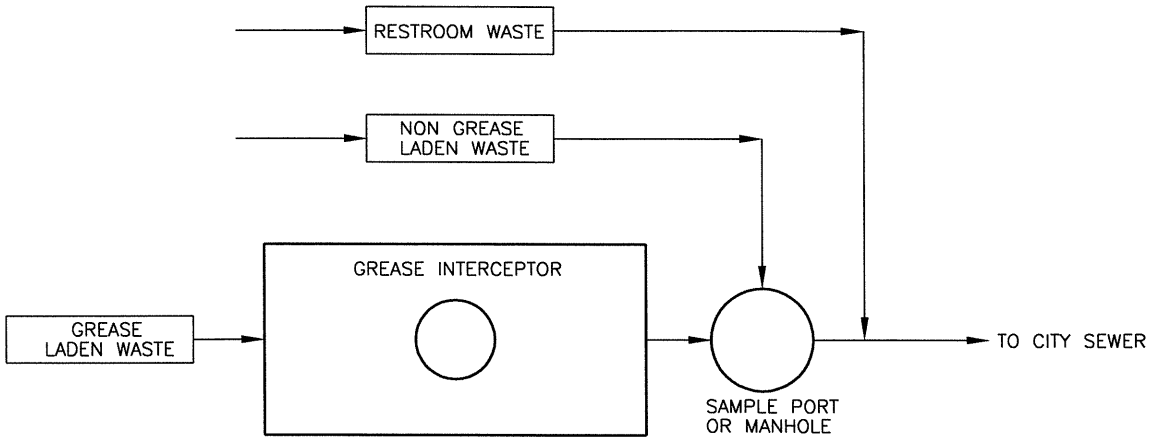

INTERCEPTOR AND PIPE LAYOUT

NOTES:

1. THE GREASE LADEN WASTEWATER LINE MUST INCLUDE A MINIMUM SIX INCH VERTICAL DROP IN THE SAMPLE PORT OR MANHOLE.
2. THE NON GREASE LADEN WASTEWATER LINE MUST FLOW THROUGH THE BOTTOM OF THE SAMPLE PORT OR MANHOLE.
3. △1 NON GREASE LADEN WASTEWATER, EXCEPT RESTROOM WASTE, MAY FLOW THROUGH THE SAMPLE PORT OR MANHOLE.
4. THE SAMPLE PORT OR MANHOLE CANNOT HOLD WATER.

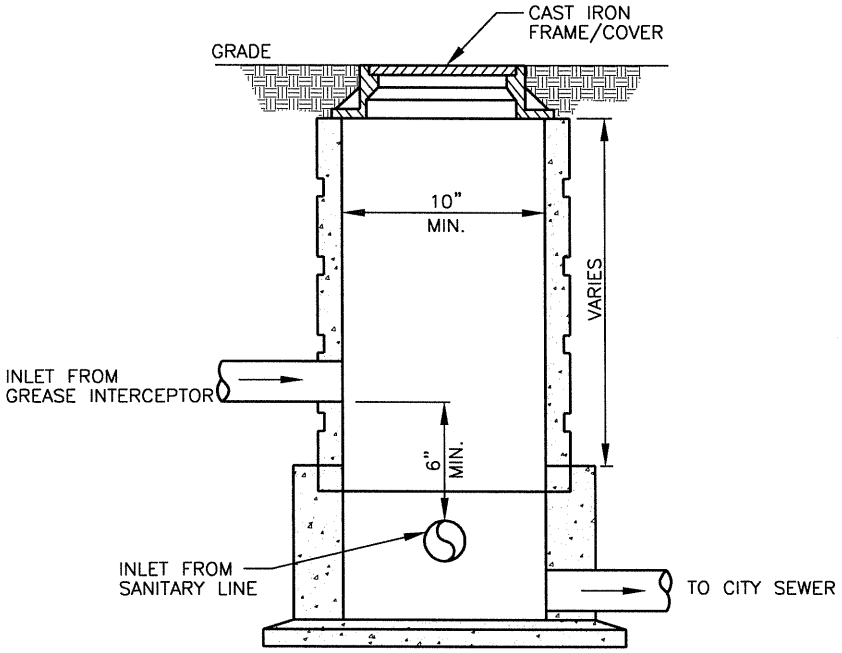

SAMPLE PORT OR MANHOLE PROFILE

NOTES:

1. SAMPLE PORT OR MANHOLE SHALL HAVE A MINIMUM 10" DIAMETER ACCESS COVER.
2. THE GREASE INTERCEPTOR INLET PIPE SHALL HAVE A MINIMUM 6" DROP FROM INLET TO OUTLET PIPING.

PREPARED BY: DLZ INDIANA, LLC

ANDREW C. LEMBERIS REGISTERED No. PE10100882 STATE OF INDIANA PROFESSIONAL ENGINEER

11-1-07

APPROVED/REVISED BY THE BOARD OF PUBLIC WORKS & SAFETY
EFFECTIVE DATE: APRIL 2007

ITEM	REVISION	APPROVED DATE
△1	TEXT REVISIONS	11-1-07

CITY OF MISHAWAKA, INDIANA

ENGINEERING STANDARDS

GREASE INTERCEPTOR & PIPING LAYOUT INSTALL.

SHT. NO. V-15

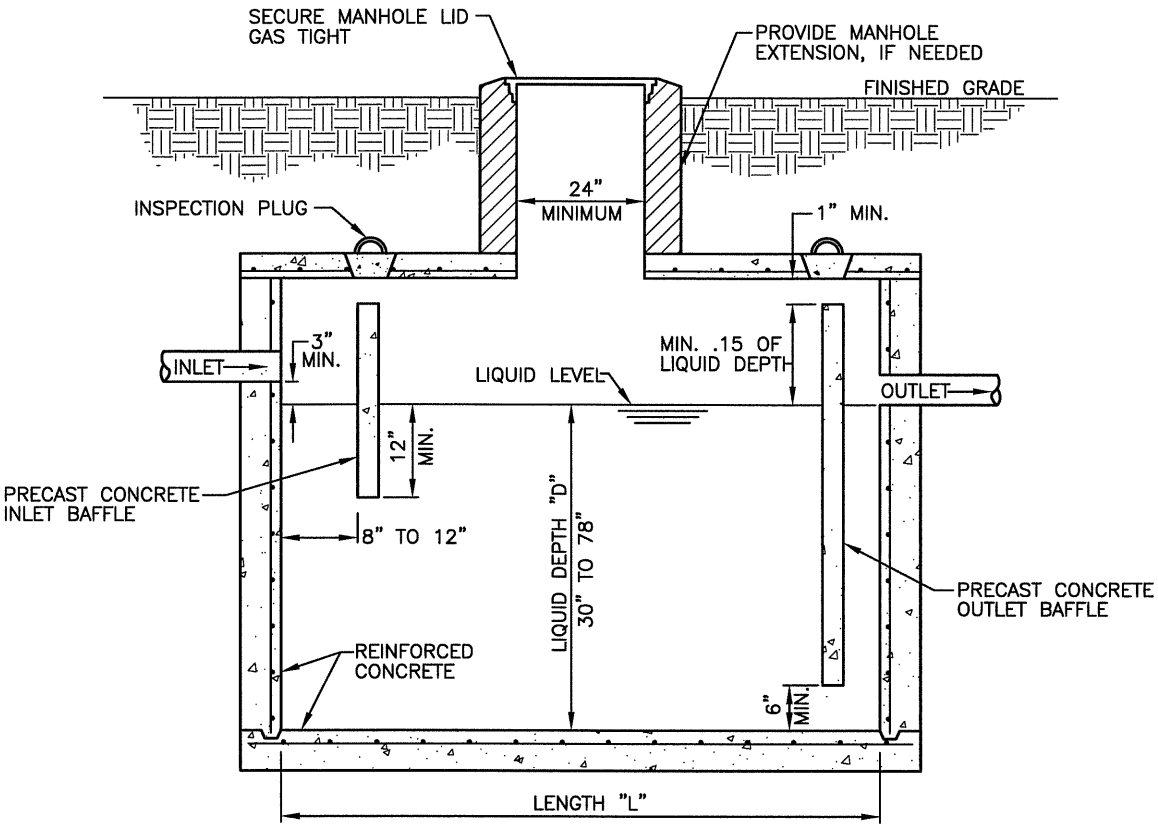

NOTES:

1. GREASE INTERCEPTOR SHALL BE A REINFORCED CONCRETE STRUCTURE.
2. GREASE INTERCEPTOR SHALL BE SIZED PER CALCULATIONS STATED IN SECTION V–12 OF THE SPECIFICATIONS.
3. GREASE INTERCEPTORS THAT HAVE A LENGTH "L" GREATER THAN 7 FEET SHALL BE EQUIPPED WITH TWO (2) SETS OF 24" DIAMETER MANHOLE OPENINGS, ONE ON EITHER SIDE ABOVE THE BAFFLES.

PREPARED BY: DLZ INDIANA, LLC

ANDREW C. LEMBERIS REGISTERED No. PE10100882 STATE OF INDIANA PROFESSIONAL ENGINEER

ACL 4/24/07

APPROVED/REVISED BY THE BOARD OF PUBLIC WORKS & SAFETY
EFFECTIVE DATE: APRIL 2007

ITEM	REVISION	APPROVED DATE

CITY OF MISHAWAKA, INDIANA

ENGINEERING STANDARDS

GREASE INTERCEPTOR DETAIL

SHT. NO. V-16

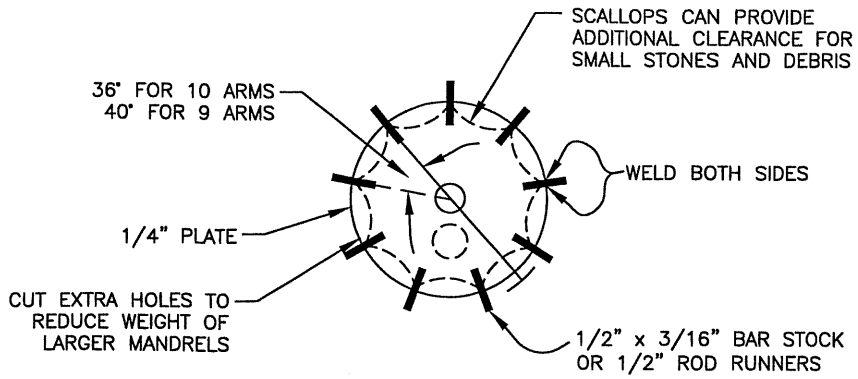

TRANSVERSE SECTION OF MANDREL

OTHER MANDREL FABRICATION IS PERMITTED IF INSPECTION IS OF EQUAL ACCURACY.

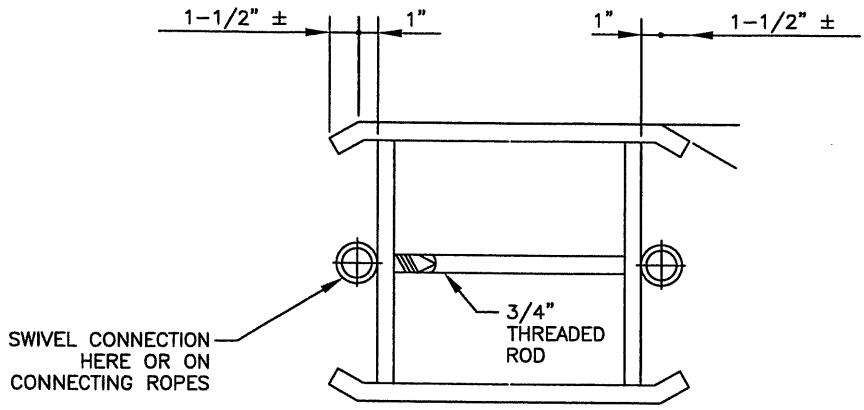

LONGITUDIAL SECTION OF MANDREL

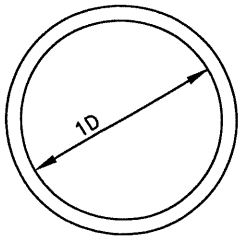

1D = 2R + 0.01

END VIEW OF PROVING RING

EXAMPLE MANDREL AND PROVING RING

(FOR PVC PIPE MEETING ASTM D-3034 FOR SDR35 AND SDR26 AND ASTM F-679)

PREPARED BY: DLZ INDIANA, LLC

ANDREW C. LEMBERIS REGISTERED No. PE10100882 STATE OF INDIANA PROFESSIONAL ENGINEER

4/24/07

APPROVED/REVISED BY THE BOARD OF PUBLIC WORKS & SAFETY
EFFECTIVE DATE: APRIL 2007

ITEM	REVISION	APPROVED DATE

CITY OF MISHAWAKA, INDIANA

ENGINEERING STANDARDS

MANDREL AND PROVING RING

SHT. NO. V-17